野火_STM32MP157底板 邮票孔_原理图_V1.0

目录

Page 1	目录
Page 2	历史版本
Page 3	电源
Page 4	邮票孔
Page 5	引出IO
Page 6	WIFI&Bluetooth
Page 7	CAN/RS485
Page 8	串口(RS232/TTL/USB转串口)
Page 9	SD卡/摄像头/FLASH
Page 10	以太网
Page 11	传感器/按键/LED
Page 12	音频
Page 13	USB HOST/USB OTG
Page 14	RGB转HDMI
Page 15	HDMI连接器
Page 16	LCD_FPC/启动切换
Page 17	4G模块

东莞野火电子技术有限公司
https://yehuosm.tmall.com

Title: 野火_STM32MP157底板_原理图

Size: A4 | Document Number: 目录 | Rev: V1.0

Date: Monday, November 08, 2021 | Sheet 1 of 17

历史版本

版本号	日期	设计	描述
V1.0	2020-09-18	xgh	初始版本

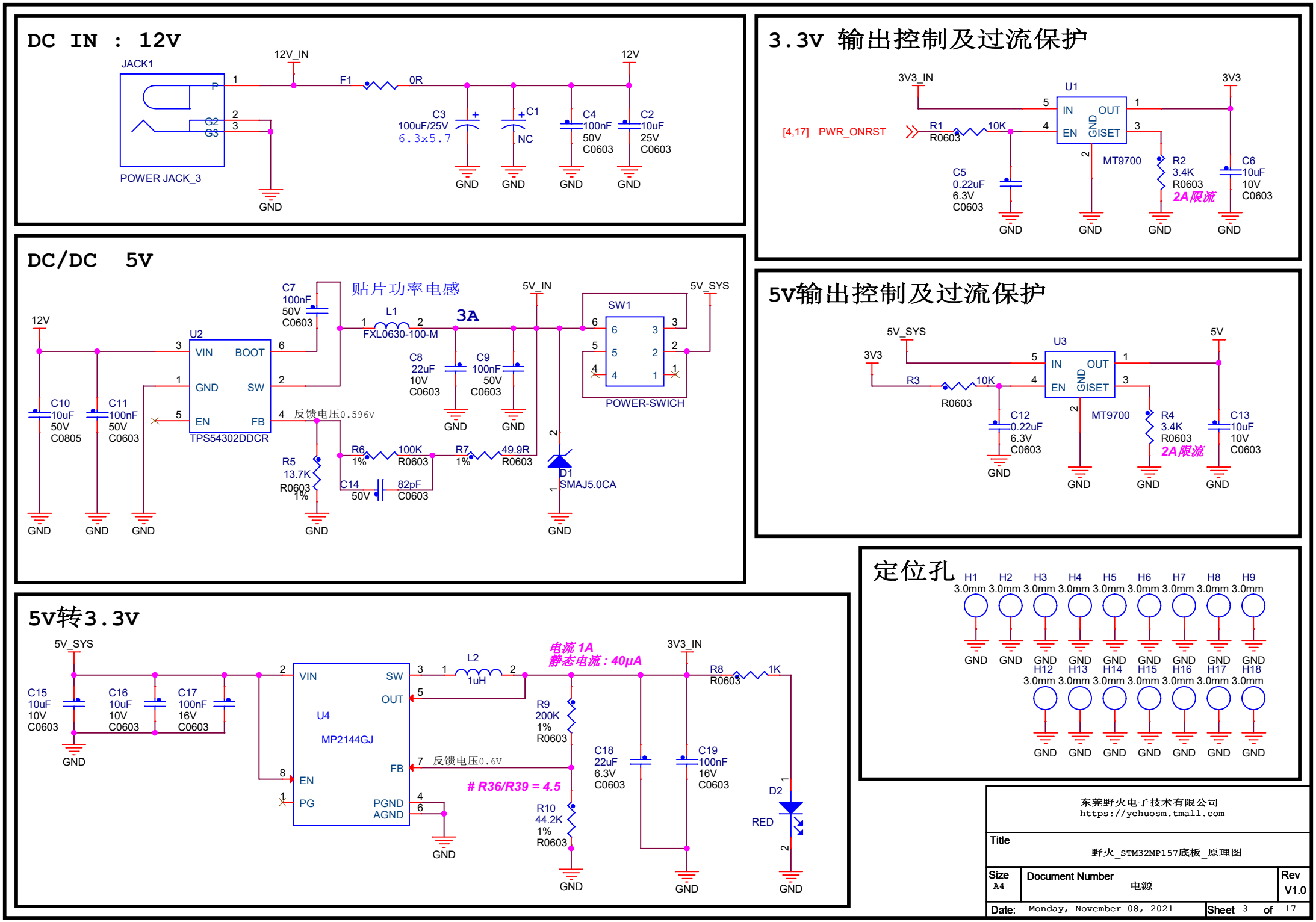
DC IN : 12V
JACK1
POWER JACK_3
12V_IN
F1
0R
12V
C3
100uF/25V
6.3x5.7
C1
NC
C4
100nF
50V
C0603
C2
10uF
25V
C0603
GND
3.3V 输出控制及过流保护
3V3_IN
U1
3V3
[4,17] PWR_ONRST
R1
R0603
10K
IN
OUT
EN
GND
ISET
MT9700
C5
0.22uF
6.3V
C0603
R2
3.4K
R0603
2A限流
C6
10uF
10V
C0603
DC/DC 5V
12V
U2
VIN
BOOT
GND
SW
EN
FB
TPS54302DDCR
C7
100nF
50V
C0603
贴片功率电感
L1
FXL0630-100-M
3A
5V_IN
5V_SYS
SW1
POWER-SWICH
C10
10uF
50V
C0805
C11
100nF
50V
C0603
反馈电压0.596V
C8
22uF
10V
C0603
C9
100nF
50V
C0603
R5
13.7K
R0603
1%
R6
100K
R0603
1%
R7
49.9R
R0603
1%
C14
82pF
50V
C0603
D1
SMAJ5.0CA
5V输出控制及过流保护
5V_SYS
3V3
U3
5V
R3
10K
R0603
C12
0.22uF
6.3V
C0603
MT9700
R4
3.4K
R0603
2A限流
C13
10uF
10V
C0603
定位孔
H1 H2 H3 H4 H5 H6 H7 H8 H9
3.0mm
H12 H13 H14 H15 H16 H17 H18
5V转3.3V
5V_SYS
C15
10uF
10V
C0603
C16
10uF
10V
C0603
C17
100nF
16V
C0603
U4
MP2144GJ
VIN
SW
OUT
FB
EN
PG
PGND
AGND
L2
1uH
电流 1A
静态电流：40μA
3V3_IN
R8
R0603
1K
R9
200K
1%
R0603
反馈电压0.6V
R36/R39 = 4.5
R10
44.2K
1%
R0603
C18
22uF
6.3V
C0603
C19
100nF
16V
C0603
D2
RED
东莞野火电子技术有限公司
https://yehuosm.tmall.com
Title
野火_STM32MP157底板_原理图
Size
A4
Document Number
电源
Rev
V1.0
Date: Monday, November 08, 2021
Sheet 3 of 17

邮票孔连接器

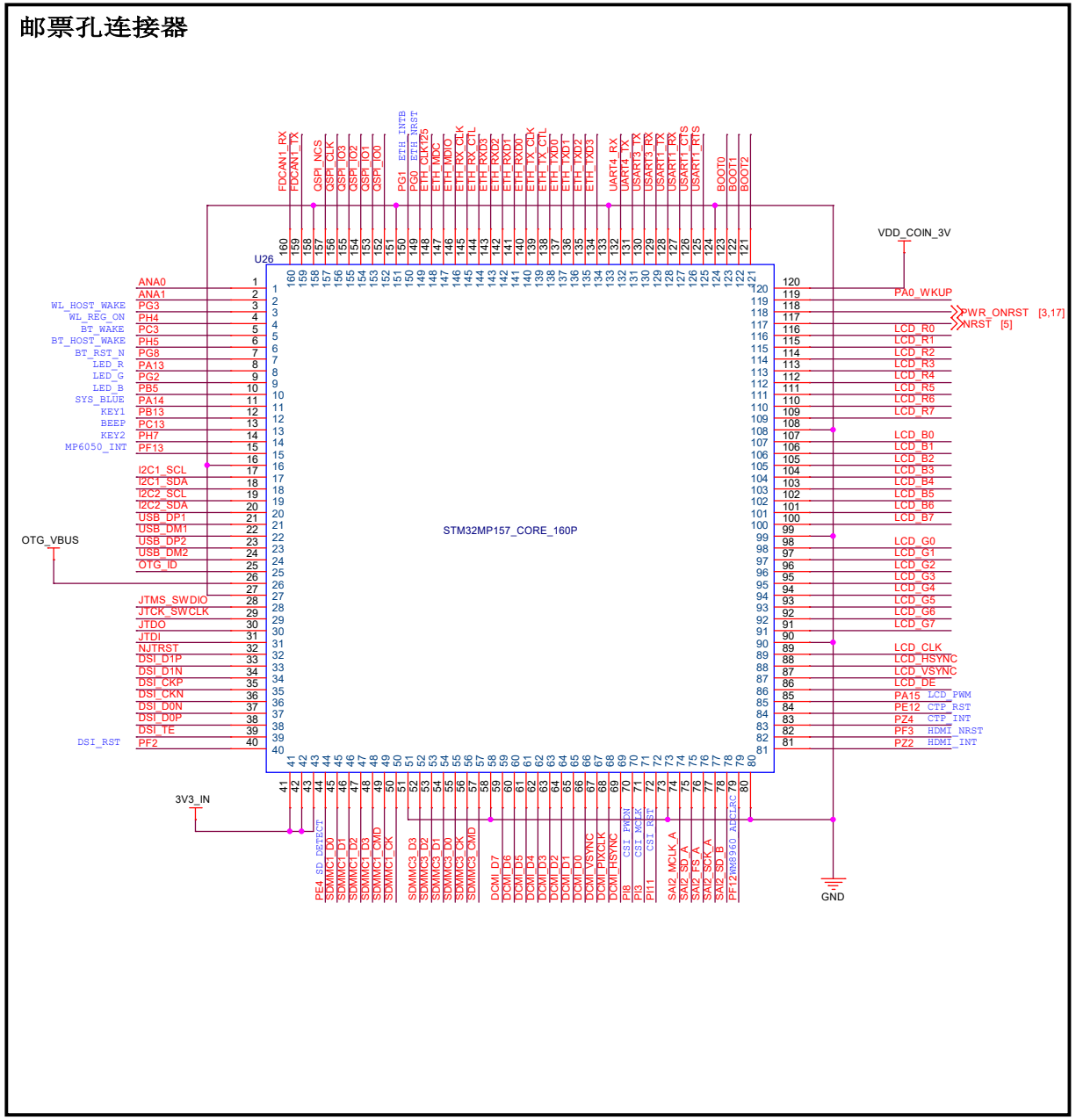

LCD

[14,16]	LCD_R7	LCD_R7
[14,16]	LCD_R6	LCD_R6
[14,16]	LCD_R5	LCD_R5
[14,16]	LCD_R4	LCD_R4
[14,16]	LCD_R3	LCD_R3
[14,16]	LCD_R2	LCD_R2
[14,16]	LCD_R1	LCD_R1
[14,16]	LCD_R0	LCD_R0
[14,16]	LCD_G7	LCD_G7
[14,16]	LCD_G6	LCD_G6
[14,16]	LCD_G5	LCD_G5
[14,16]	LCD_G4	LCD_G4
[14,16]	LCD_G3	LCD_G3
[14,16]	LCD_G2	LCD_G2
[14,16]	LCD_G1	LCD_G1
[14,16]	LCD_G0	LCD_G0
[14,16]	LCD_B7	LCD_B7
[14,16]	LCD_B6	LCD_B6
[14,16]	LCD_B5	LCD_B5
[14,16]	LCD_B4	LCD_B4
[14,16]	LCD_B3	LCD_B3
[14,16]	LCD_B2	LCD_B2
[14,16]	LCD_B1	LCD_B1
[14,16]	LCD_B0	LCD_B0
[14,16]	LCD_HSYNC	LCD_HSYNC
[14,16]	LCD_VSYNC	LCD_VSYNC
[14,16]	LCD_DE	LCD_DE
[14,16]	LCD_CLK	LCD_CLK
CTP_RST [9,16]	PE12	PE12
CTP_INT [9,16]	PZ4	PZ4
LCD_PWM [9,16]	PA15	PA15
HDMI_INT [14]	PZ2	PZ2
HDMI_NRST [14]	PF3	PF3

GPIO

[8]	PA0_WKUP	PA0_WKUP
uSD_DETECT [9]	PE4	PE4
BT_RST_N [6]	PG8	PG8
BT_WAKE [6]	PC3	PC3
BT_HOST_WAKE [6]	PH5	PH5
WL_REG_ON [6]	PH4	PH4
WL_HOST_WAKE [6]	PG3	PG3
LED_R [11]	PA13	PA13
LED_G [11]	PG2	PG2
LED_B [11]	PB5	PB5
SYS_BLUE [11]	PA14	PA14
KEY1 [11]	PB13	PB13
KEY2 [11]	PH7	PH7
MP6050_INT [11]	PF13	PF13
BEEP [11]	PC13	PC13
WM8960_ADCLRC [12]	PF12	PF12

ADC

[5,11]	ANA0	ANA0
[5]	ANA1	ANA1

DSI

[9]	DSI_D0N	DSI_D0N
[9]	DSI_D0P	DSI_D0P
[9]	DSI_D1N	DSI_D1N
[9]	DSI_D1P	DSI_D1P
[9]	DSI_CKN	DSI_CKN
[9]	DSI_CKP	DSI_CKP
[9]	DSI_TE	DSI_TE
DSI_RST [9]	PF2	PF2

I2C

I2C2_SCL	I2C2_SCL [5,9,12,14]
I2C2_SDA	I2C2_SDA [5,9,12,14]
I2C1_SCL	I2C1_SCL [5,9,11,16]
I2C1_SDA	I2C1_SDA [5,9,11,16]

FDCAN

FDCAN1_RX	FDCAN1_RX [5,7]
FDCAN1_TX	FDCAN1_TX [5,7]

USB

USB_DP1	USB_DP1 [13]
USB_DM1	USB_DM1 [13]
USB_DP2	USB_DP2 [13]
USB_DM2	USB_DM2 [13]
OTG_ID	OTG_ID [13]

UART

UART4_TX	UART4_TX [5,8]
UART4_RX	UART4_RX [5,8]
USART3_TX	USART3_TX [5,7]
USART3_RX	USART3_RX [5,7]
USART1_RTS	USART1_RTS [5,6,7]
USART1_CTS	USART1_CTS [5,6,7]
USART1_TX	USART1_TX [5,6,7]
USART1_RX	USART1_RX [5,6,7]

DCMI

	DCMI_D0	DCMI_D0 [9]
	DCMI_D1	DCMI_D1 [9]
	DCMI_D2	DCMI_D2 [9]
	DCMI_D3	DCMI_D3 [9]
	DCMI_D4	DCMI_D4 [9]
	DCMI_D5	DCMI_D5 [9]
	DCMI_D6	DCMI_D6 [9]
	DCMI_D7	DCMI_D7 [9]
	DCMI_HSYNC	DCMI_HSYNC [9]
	DCMI_VSYNC	DCMI_VSYNC [9]
	DCMI_PIXCLK	DCMI_PIXCLK [9]
CSI_MCLK	PI3	PI3 [9]
CSI_PWDN	PI8	PI8 [9]
CSI_RST	PI11	PI11 [9]

SAI

SAI2_FS_A	SAI2_FS_A [12]
SAI2_SD_A	SAI2_SD_A [12]
SAI2_SCK_A	SAI2_SCK_A [12]
SAI2_MCLK_A	SAI2_MCLK_A [12]
SAI2_SD_B	SAI2_SD_B [12]

ETH

	ETH_TXD0	ETH_TXD0 [10]
	ETH_TXD1	ETH_TXD1 [10]
	ETH_TXD2	ETH_TXD2 [10]
	ETH_TXD3	ETH_TXD3 [10]
	ETH_TX_CTL	ETH_TX_CTL [10]
	ETH_TX_CLK	ETH_TX_CLK [10]
	ETH_RXD0	ETH_RXD0 [10]
	ETH_RXD1	ETH_RXD1 [10]
	ETH_RXD2	ETH_RXD2 [10]
	ETH_RXD3	ETH_RXD3 [10]
	ETH_RX_CTL	ETH_RX_CTL [10]
	ETH_RX_CLK	ETH_RX_CLK [10]
	ETH_MDIO	ETH_MDIO [10]
	ETH_MDC	ETH_MDC [10]
	ETH_CLK125	ETH_CLK125 [10]
ETH_NRST	PG0	PG0 [10]
ETH_INTB	PG1	PG1 [10]

BOOT

BOOT0	BOOT0 [16]
BOOT1	BOOT1 [16]
BOOT2	BOOT2 [16]

WIFI

[6]	SDMMC3_D0	SDMMC3_D0
[6]	SDMMC3_D1	SDMMC3_D1
[6]	SDMMC3_D2	SDMMC3_D2
[6]	SDMMC3_D3	SDMMC3_D3
[6]	SDMMC3_CMD	SDMMC3_CMD
[6]	SDMMC3_CK	SDMMC3_CK

SD

[9]	SDMMC1_D0	SDMMC1_D0
[9]	SDMMC1_D1	SDMMC1_D1
[9]	SDMMC1_D2	SDMMC1_D2
[9]	SDMMC1_D3	SDMMC1_D3
[9]	SDMMC1_CMD	SDMMC1_CMD
[9]	SDMMC1_CK	SDMMC1_CK

QSPI

[5,9]	QSPI_IO0	QSPI_IO0
[5,9]	QSPI_IO1	QSPI_IO1
[5,9]	QSPI_IO2	QSPI_IO2
[5,9]	QSPI_IO3	QSPI_IO3
[5,9]	QSPI_CLK	QSPI_CLK
[5,9]	QSPI_NCS	QSPI_NCS

JTAG

[5]	JTDO	JTDO
[5]	JTDI	JTDI
[5]	JTCK_SWCLK	JTCK_SWCLK
[5]	JTMS_SWDIO	JTMS_SWDIO
[5]	NJTRST	NJTRST

东莞野火电子技术有限公司
https://yehuosm.tmall.com

Title	野火_STM32MP157底板_原理图	
Size A3	Document Number CPU_B2B	Rev V1.0
Date: Monday, November 08, 2021	Sheet 4 of 13	

引出IO口(排针)

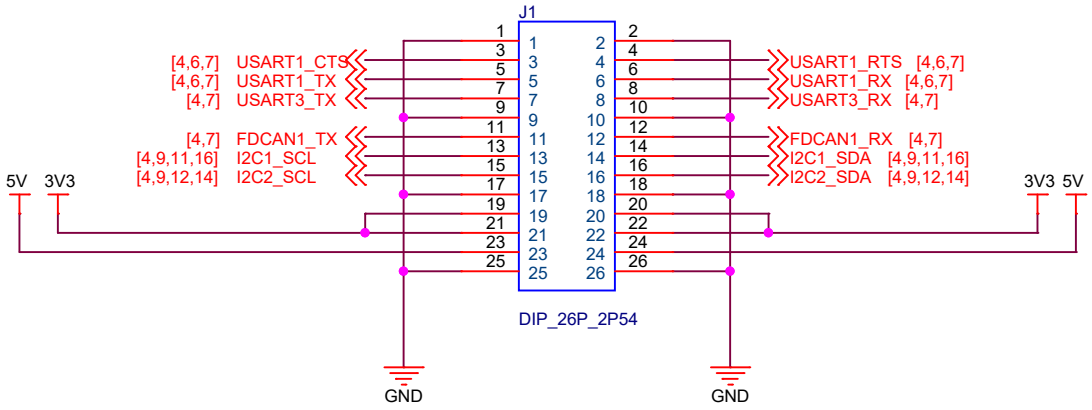

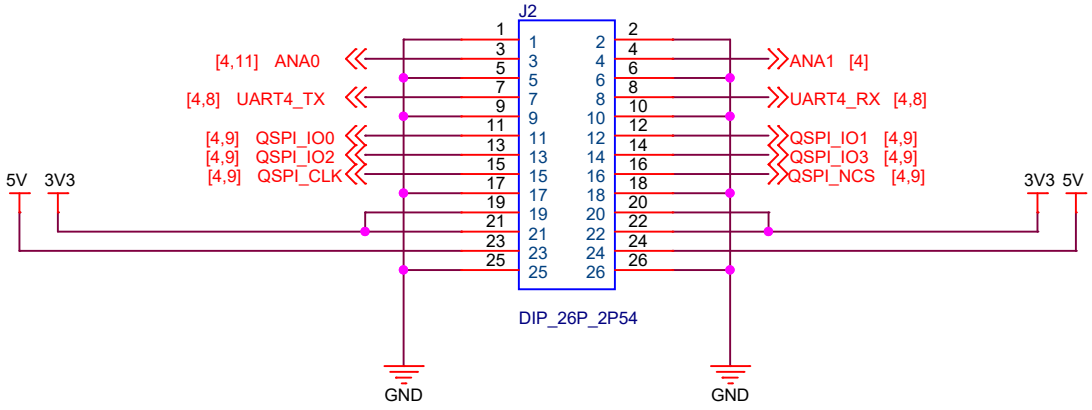

复位

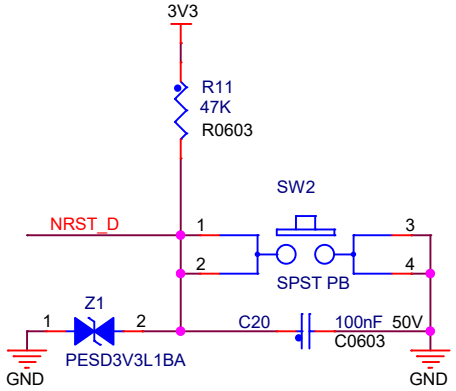

RTC电池

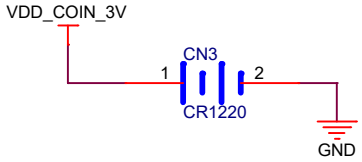

JTAG调试口

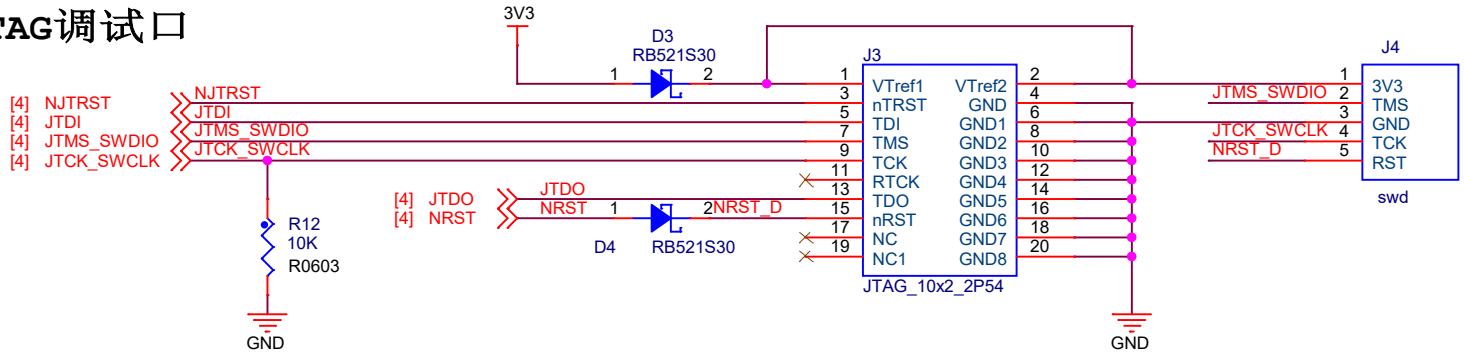

东莞野火电子技术有限公司 https://yehuosm.tmall.com		
Title	野火_STM32MP157底板_原理图	
Size A4	Document Number 引出IO	Rev V1.0
Date: Monday, November 08, 2021	Sheet 5 of 17	

WIFI&Bluetooth

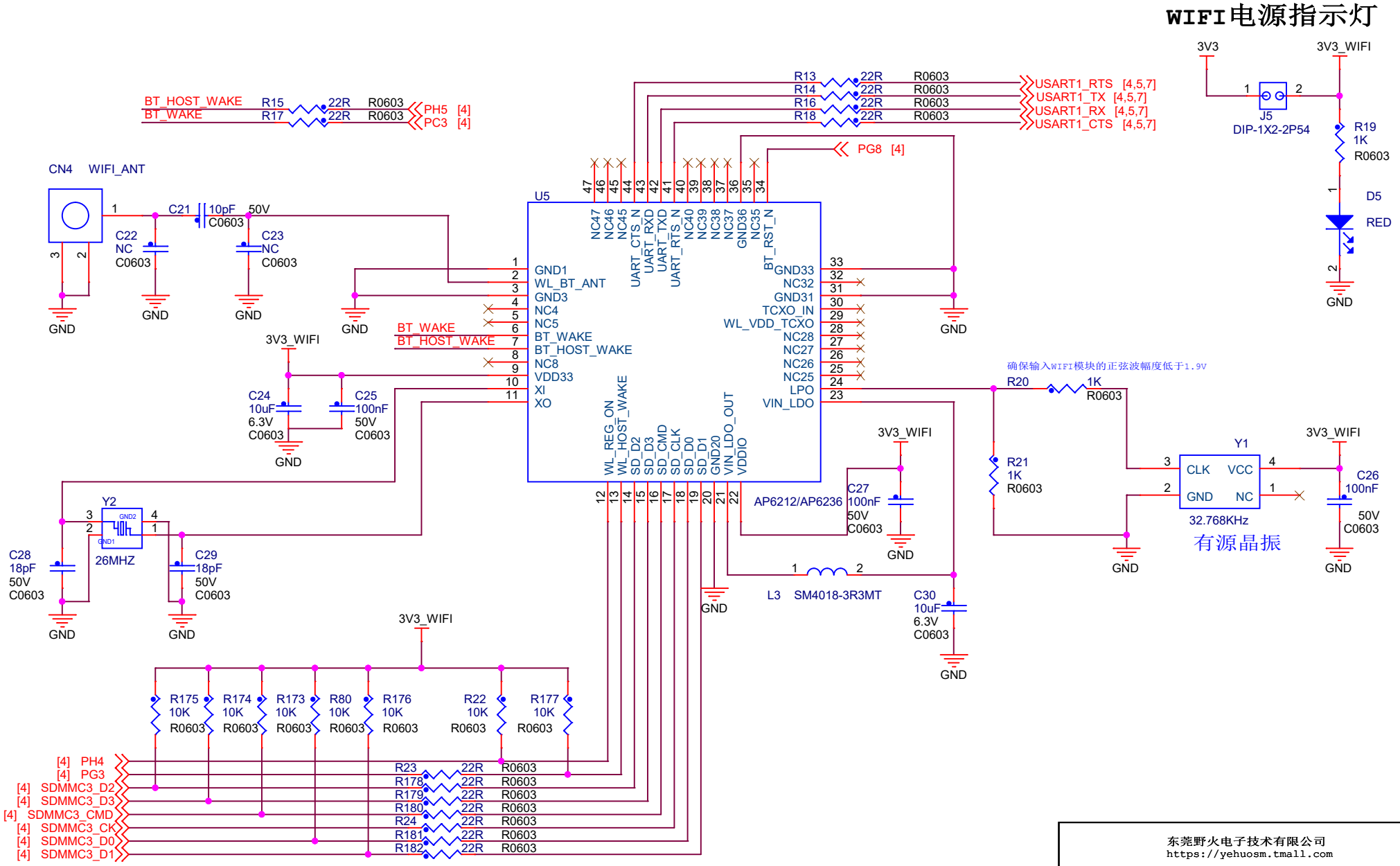

东莞野火电子技术有限公司 https://yehuosm.tmall.com			
Title	野火_STM32MP157底板_原理图		
Size A4	Document Number WIFI&Bluetooth		Rev V1.0
Date: Monday, November 08, 2021		Sheet 6 of 17	

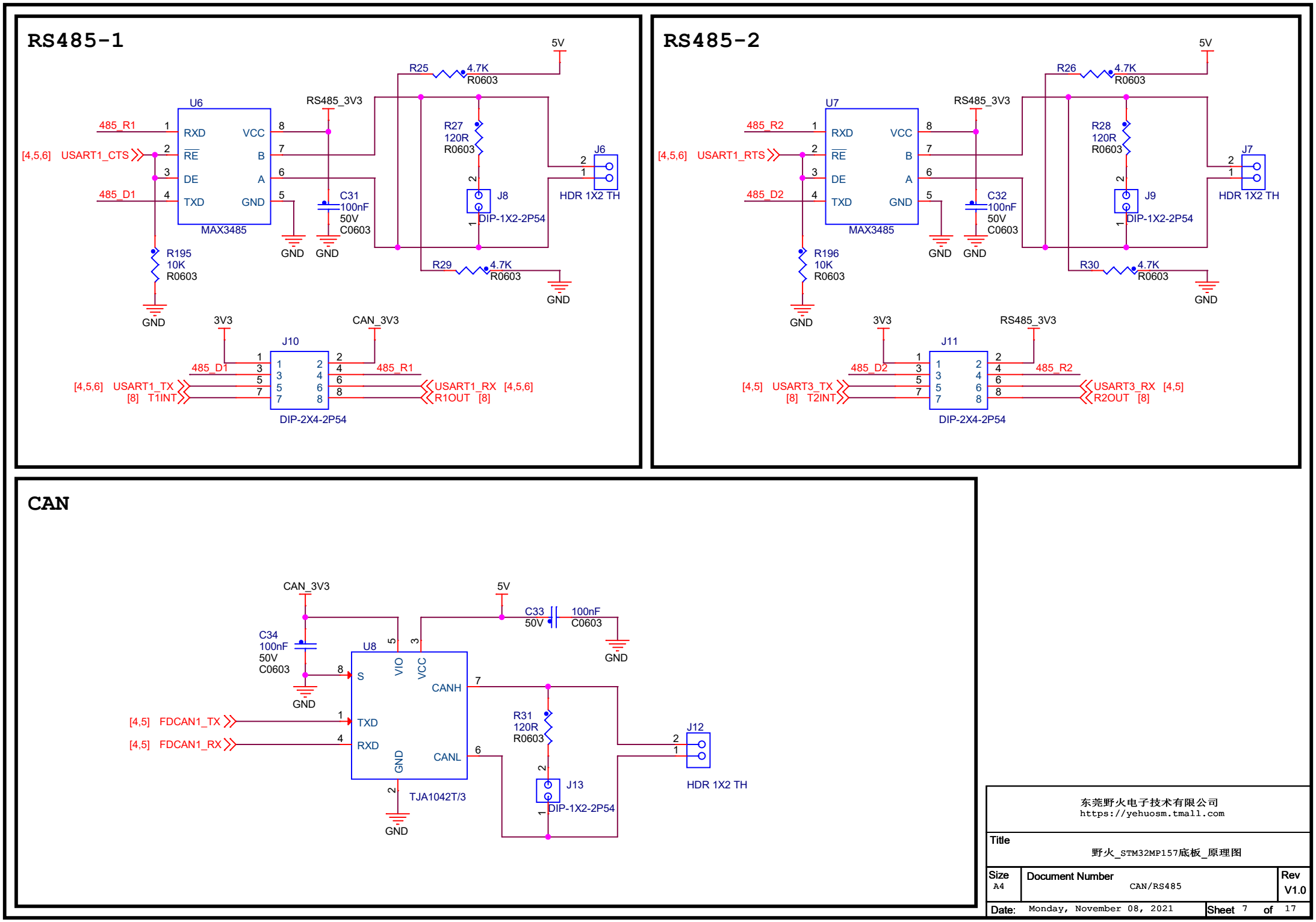
RS485-1
U6
MAX3485
RXD
RE
DE
TXD
VCC
B
A
GND
485_R1
[4,5,6] USART1_CTS
485_D1
RS485_3V3
R25 4.7K R0603
5V
R27 120R R0603
J8
DIP-1X2-2P54
J6
HDR 1X2 TH
C31 100nF 50V C0603
R195 10K R0603
R29 4.7K R0603
GND
3V3
CAN_3V3
J10
DIP-2X4-2P54
485_D1
485_R1
[4,5,6] USART1_TX
[8] T1INT
USART1_RX [4,5,6]
R1OUT [8]
RS485-2
U7
MAX3485
485_R2
[4,5,6] USART1_RTS
485_D2
R26 4.7K R0603
R28 120R R0603
J9
DIP-1X2-2P54
J7
HDR 1X2 TH
C32 100nF 50V C0603
R196 10K R0603
R30 4.7K R0603
J11
DIP-2X4-2P54
485_D2
485_R2
[4,5] USART3_TX
[8] T2INT
USART3_RX [4,5]
R2OUT [8]
CAN
CAN_3V3
5V
C33 50V 100nF C0603
C34 100nF 50V C0603
U8
S
VIO
VCC
CANH
TXD
RXD
GND
CANL
TJA1042T/3
[4,5] FDCAN1_TX
[4,5] FDCAN1_RX
R31 120R R0603
J13
DIP-1X2-2P54
J12
HDR 1X2 TH
东莞野火电子技术有限公司
https://yehuosm.tmall.com
Title
野火_STM32MP157底板_原理图
Size A4
Document Number CAN/RS485
Rev V1.0
Date: Monday, November 08, 2021
Sheet 7 of 17

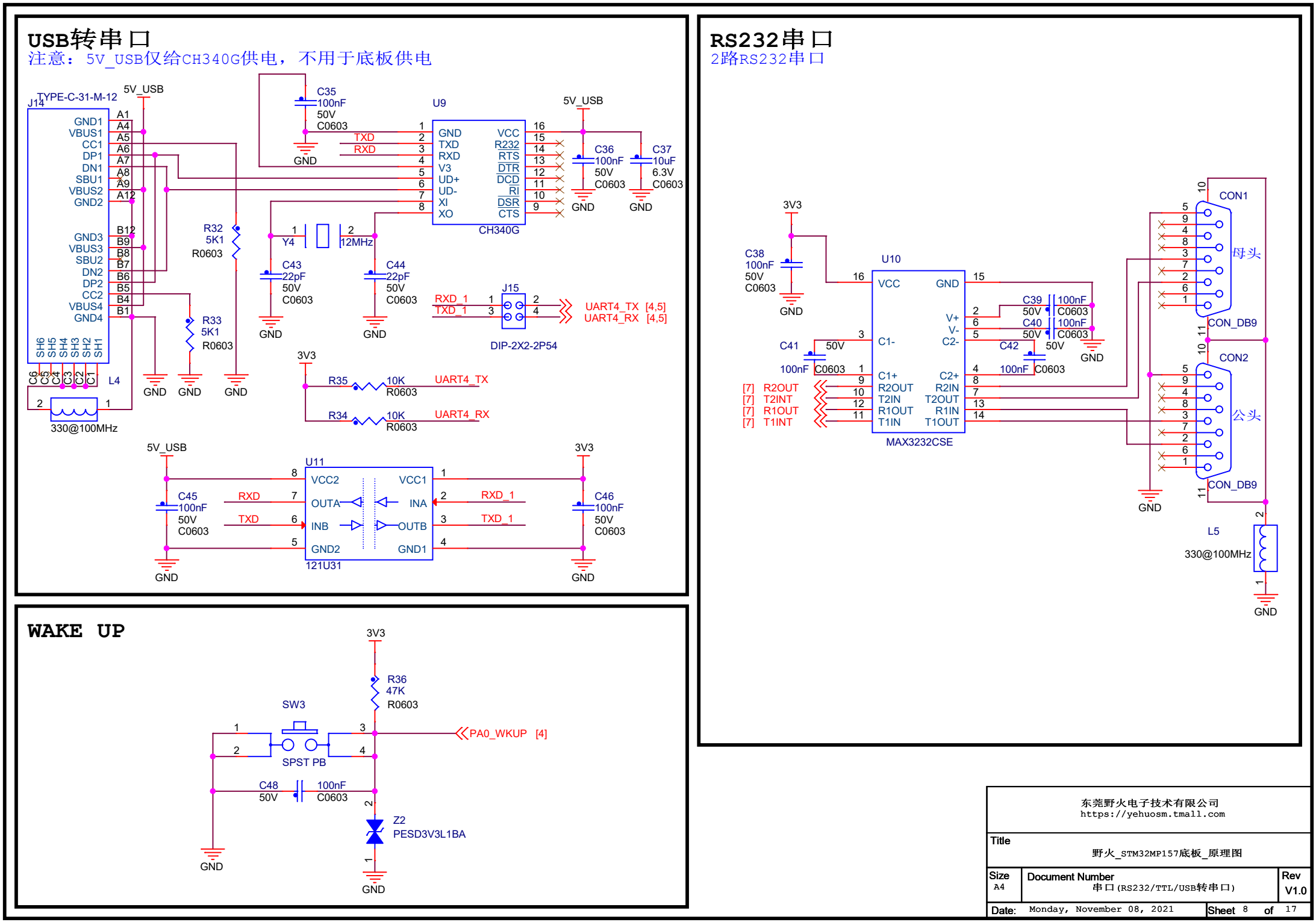
USB转串口
注意：5V_USB仅给CH340G供电，不用于底板供电
J14
TYPE-C-31-M-12
5V_USB
GND1
VBUS1
CC1
DP1
DN1
SBU1
VBUS2
GND2
GND3
VBUS3
SBU2
DN2
DP2
CC2
VBUS4
GND4
SH6
SH5
SH4
SH3
SH2
SH1
L4
330@100MHz
C35
100nF
50V
C0603
U9
CH340G
GND
TXD
RXD
VCC
R232
RTS
DTR
DCD
RI
DSR
CTS
V3
UD+
UD-
XI
XO
C36
100nF
50V
C0603
C37
10uF
6.3V
C0603
R32
5K1
R0603
R33
5K1
R0603
Y4
12MHz
C43
22pF
50V
C0603
C44
22pF
50V
C0603
J15
DIP-2X2-2P54
RXD_1
TXD_1
UART4_TX [4,5]
UART4_RX [4,5]
3V3
R35
10K
R0603
UART4_TX
R34
10K
R0603
UART4_RX
U11
121U31
VCC2
VCC1
OUTA
INA
INB
OUTB
GND2
GND1
C45
100nF
50V
C0603
C46
100nF
50V
C0603
RXD
TXD
RXD_1
TXD_1
RS232串口
2路RS232串口
U10
MAX3232CSE
VCC
GND
V+
V-
C1-
C2-
C1+
C2+
R2OUT
T2IN
R1OUT
T1IN
R2IN
T2OUT
R1IN
T1OUT
C38
100nF
50V
C0603
C39
100nF
50V
C0603
C40
100nF
50V
C0603
C41
100nF
50V
C0603
C42
100nF
50V
C0603
[7] R2OUT
[7] T2INT
[7] R1OUT
[7] T1INT
CON1
CON_DB9
母头
CON2
公头
L5
330@100MHz
WAKE UP
R36
47K
R0603
SW3
SPST PB
PA0_WKUP [4]
C48
100nF
50V
C0603
Z2
PESD3V3L1BA
东莞野火电子技术有限公司
https://yehuosm.tmall.com
Title
野火_STM32MP157底板_原理图
Size
A4
Document Number
串口(RS232/TTL/USB转串口)
Rev
V1.0
Date: Monday, November 08, 2021
Sheet 8 of 17

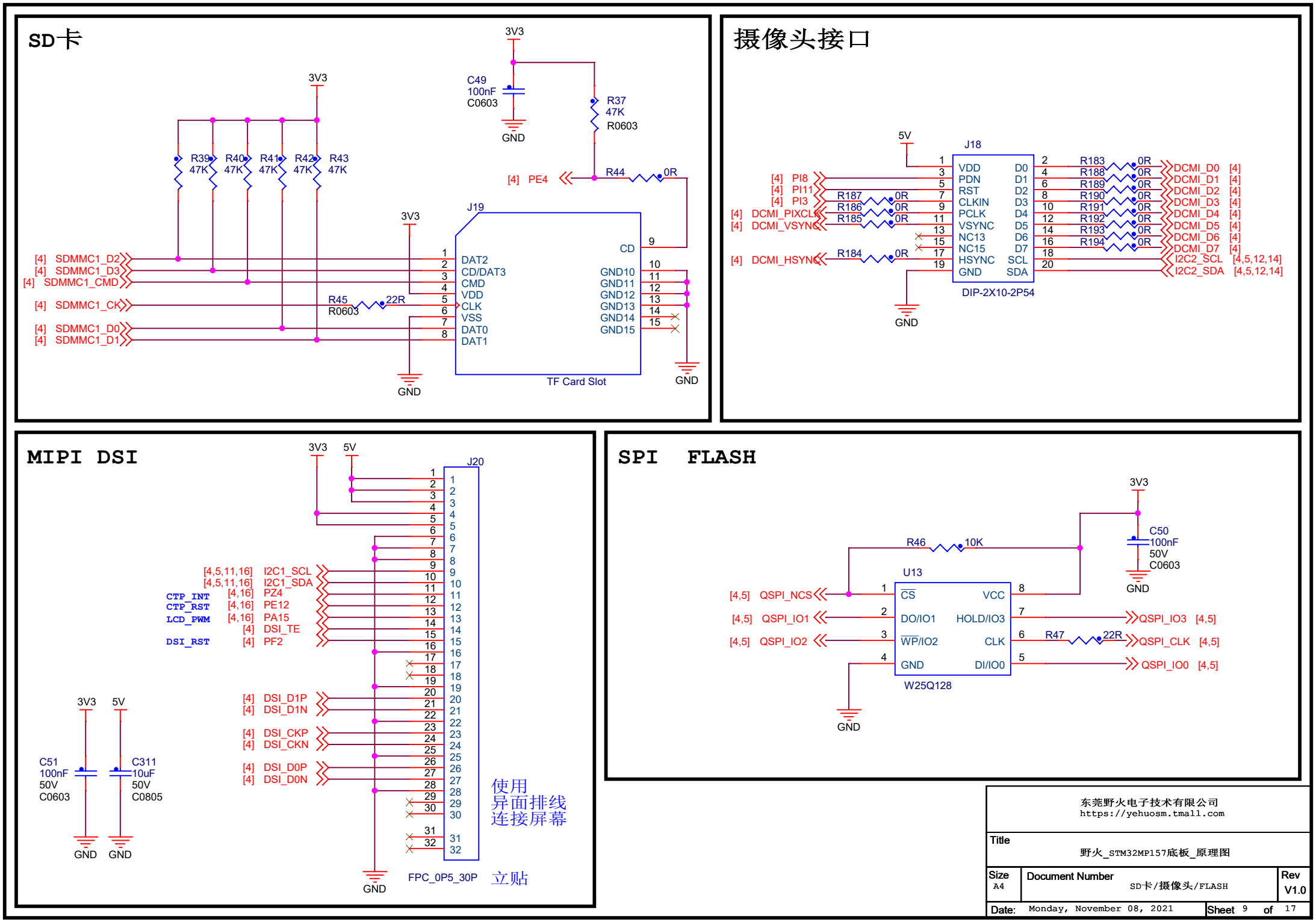
SD卡
3V3
C49
100nF
C0603
GND
R37
47K
R0603
R39 47K
R40 47K
R41 47K
R42 47K
R43 47K
[4] PE4
R44 0R
J19
[4] SDMMC1_D2
[4] SDMMC1_D3
[4] SDMMC1_CMD
[4] SDMMC1_CK
[4] SDMMC1_D0
[4] SDMMC1_D1
R45 22R
R0603
DAT2
CD/DAT3
CMD
VDD
CLK
VSS
DAT0
DAT1
CD
GND10
GND11
GND12
GND13
GND14
GND15
TF Card Slot
摄像头接口
5V
J18
[4] PI8
[4] PI11
[4] PI3
[4] DCMI_PIXCLK
[4] DCMI_VSYNC
[4] DCMI_HSYNC
R187 0R
R186 0R
R185 0R
R184 0R
VDD
PDN
RST
CLKIN
PCLK
VSYNC
NC13
NC15
HSYNC
GND
D0
D1
D2
D3
D4
D5
D6
D7
SCL
SDA
R183 0R
R188 0R
R189 0R
R190 0R
R191 0R
R192 0R
R193 0R
R194 0R
DCMI_D0 [4]
DCMI_D1 [4]
DCMI_D2 [4]
DCMI_D3 [4]
DCMI_D4 [4]
DCMI_D5 [4]
DCMI_D6 [4]
DCMI_D7 [4]
I2C2_SCL [4,5,12,14]
I2C2_SDA [4,5,12,14]
DIP-2X10-2P54
MIPI DSI
3V3
5V
J20
[4,5,11,16] I2C1_SCL
[4,5,11,16] I2C1_SDA
CTP_INT [4,16] PZ4
CTP_RST [4,16] PE12
LCD_PWM [4,16] PA15
[4] DSI_TE
DSI_RST [4] PF2
[4] DSI_D1P
[4] DSI_D1N
[4] DSI_CKP
[4] DSI_CKN
[4] DSI_D0P
[4] DSI_D0N
C51
100nF
50V
C0603
C311
10uF
50V
C0805
FPC_0P5_30P
使用
异面排线
连接屏幕
立贴
SPI FLASH
3V3
C50
100nF
50V
C0603
R46 10K
U13
[4,5] QSPI_NCS
[4,5] QSPI_IO1
[4,5] QSPI_IO2
CS
DO/IO1
WP/IO2
GND
VCC
HOLD/IO3
CLK
DI/IO0
R47 22R
QSPI_IO3 [4,5]
QSPI_CLK [4,5]
QSPI_IO0 [4,5]
W25Q128
东莞野火电子技术有限公司
https://yehuosm.tmall.com
Title
野火_STM32MP157底板_原理图
Size A4
Document Number
SD卡/摄像头/FLASH
Rev V1.0
Date: Monday, November 08, 2021
Sheet 9 of 17

以太网接口

TXC / RXC : delays 2ns

PHY Address : 001

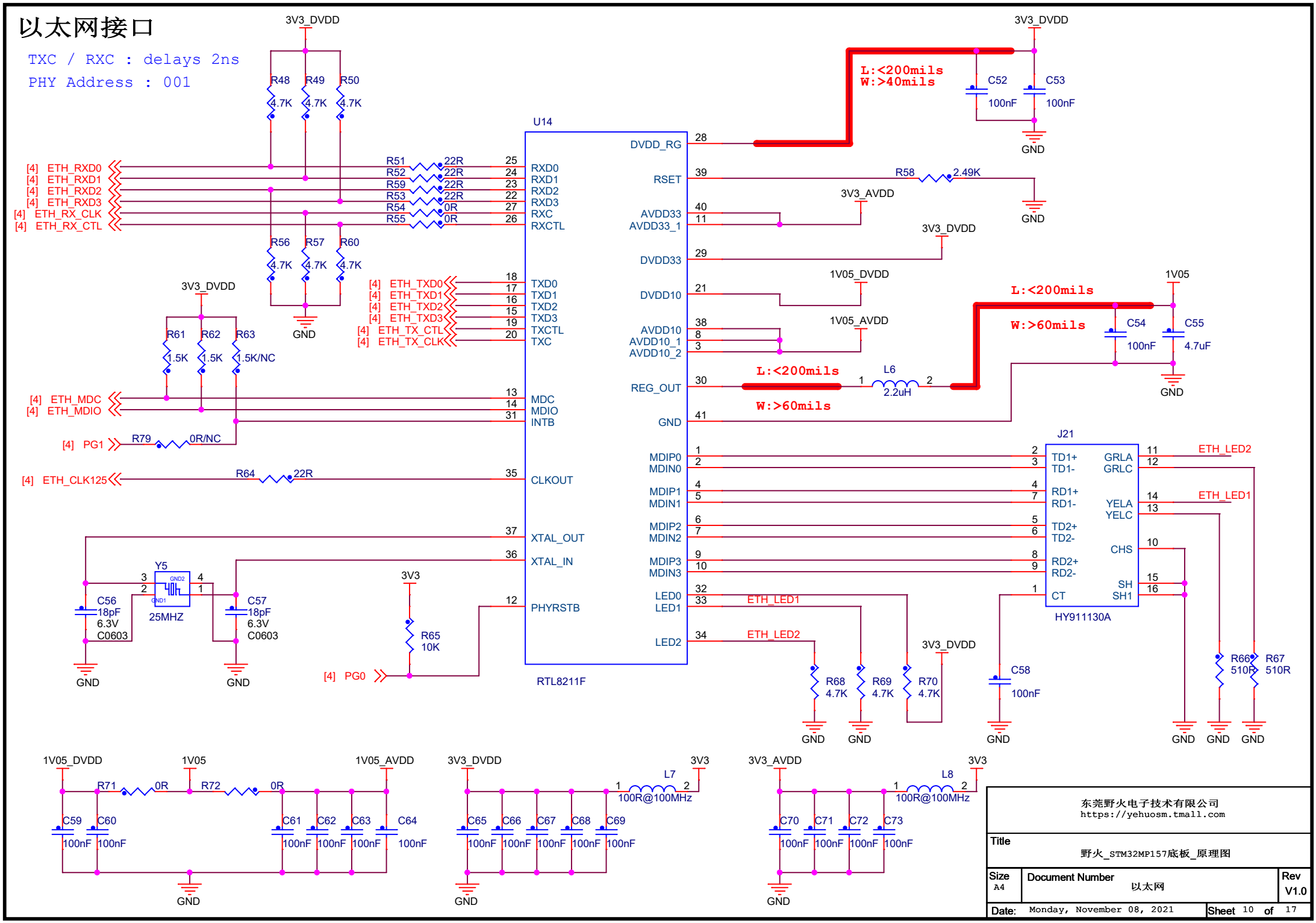

东莞野火电子技术有限公司 https://yehuosm.tmall.com		
Title	野火_STM32MP157底板_原理图	
Size A4	Document Number 以太网	Rev V1.0
Date: Monday, November 08, 2021	Sheet 10 of 17	

六轴传感器

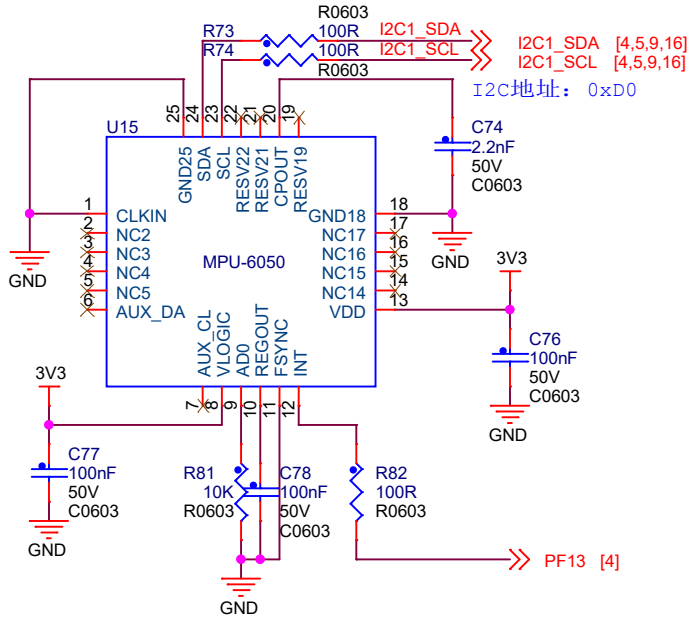

有源蜂鸣器

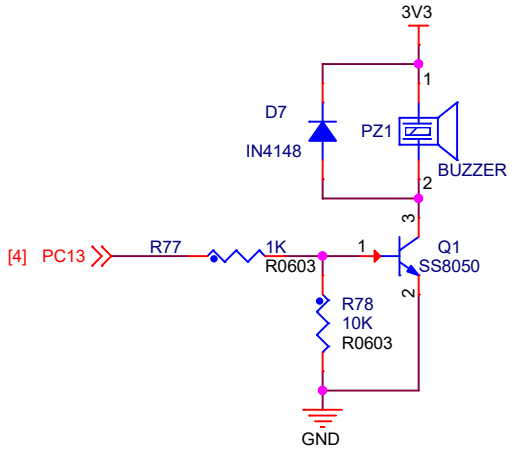

按键

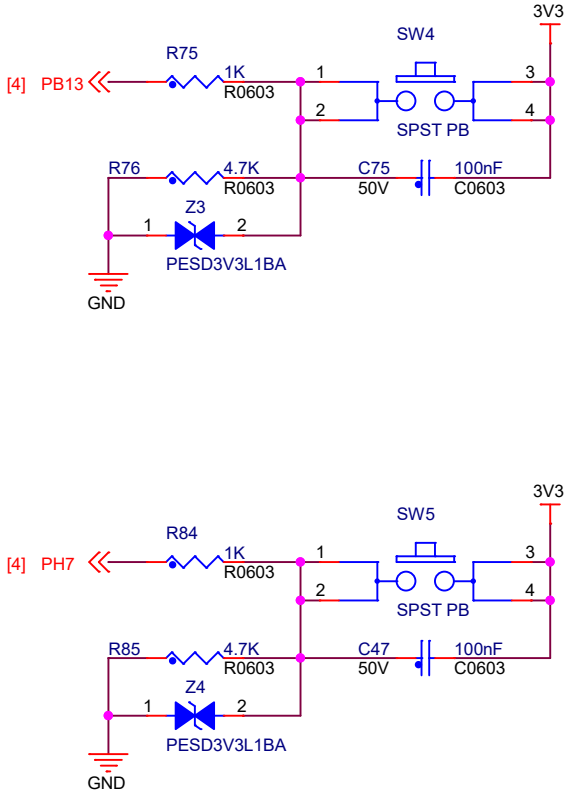

彩色LED

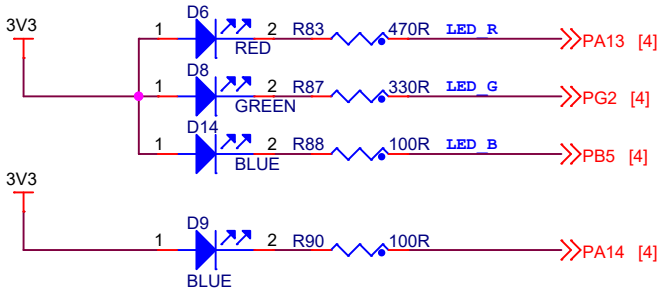

可调电阻

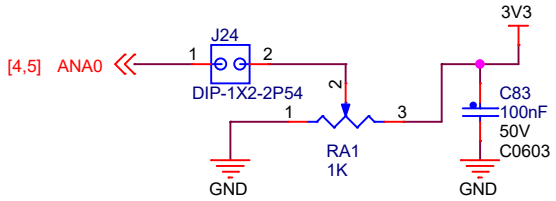

东莞野火电子技术有限公司 https://yehuosm.tmall.com		
Title 野火_STM32MP157底板_原理图		
Size A4	Document Number 传感器/按键/LED	Rev V1.0
Date: Monday, November 08, 2021	Sheet 11 of 17	

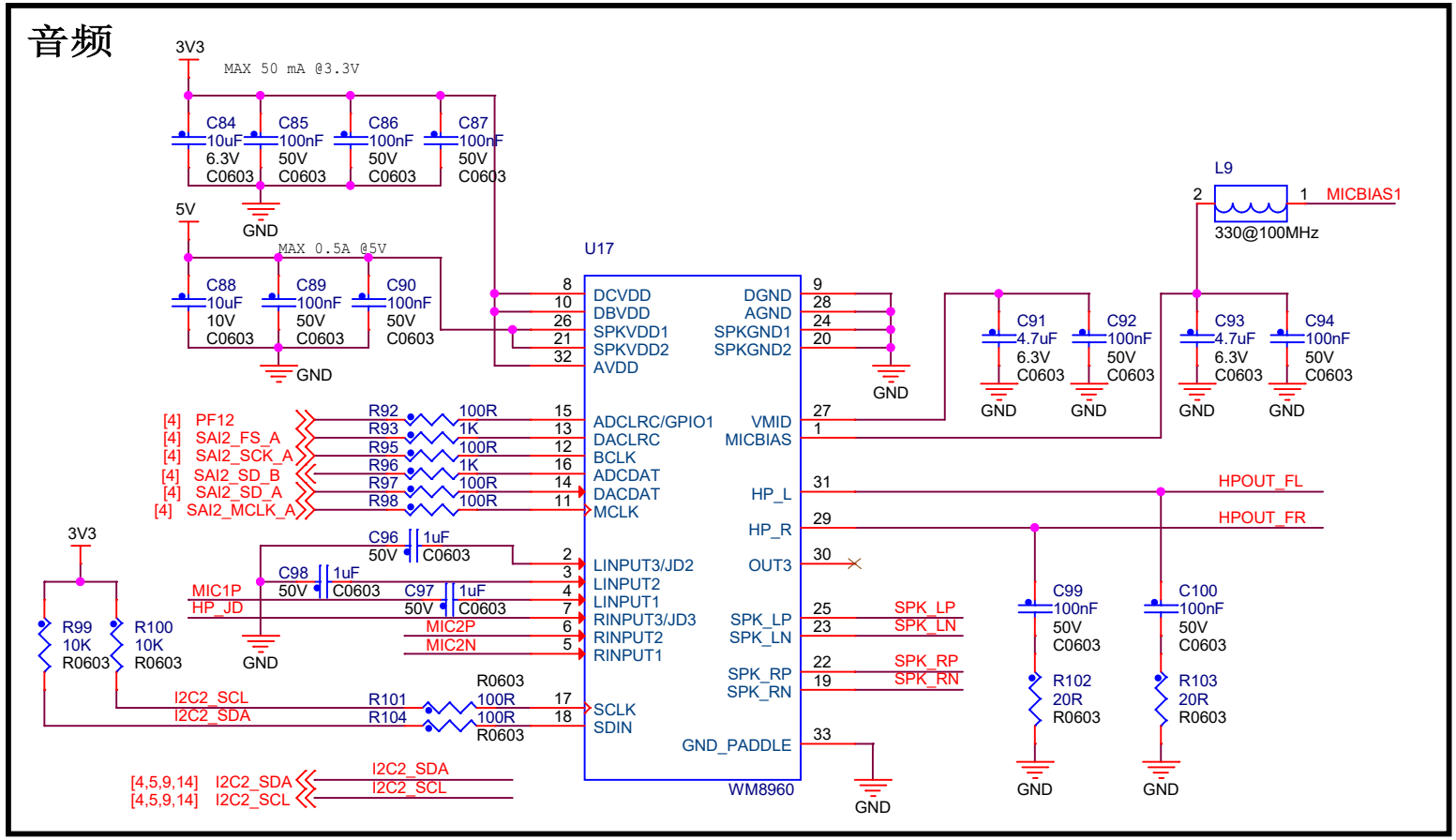

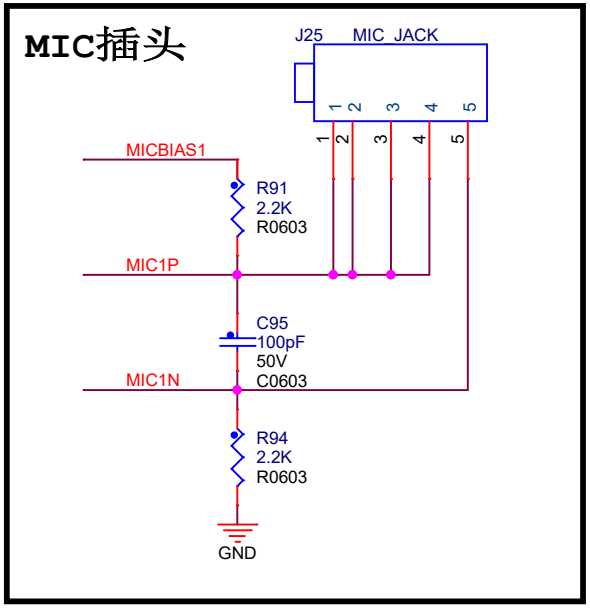

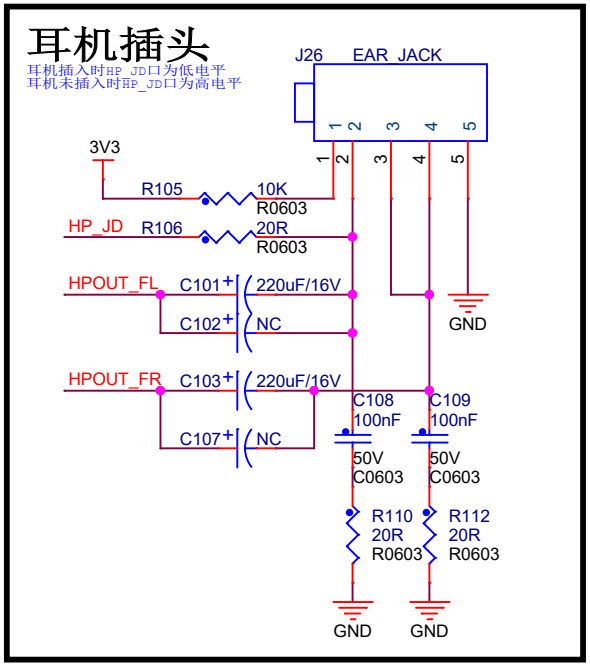

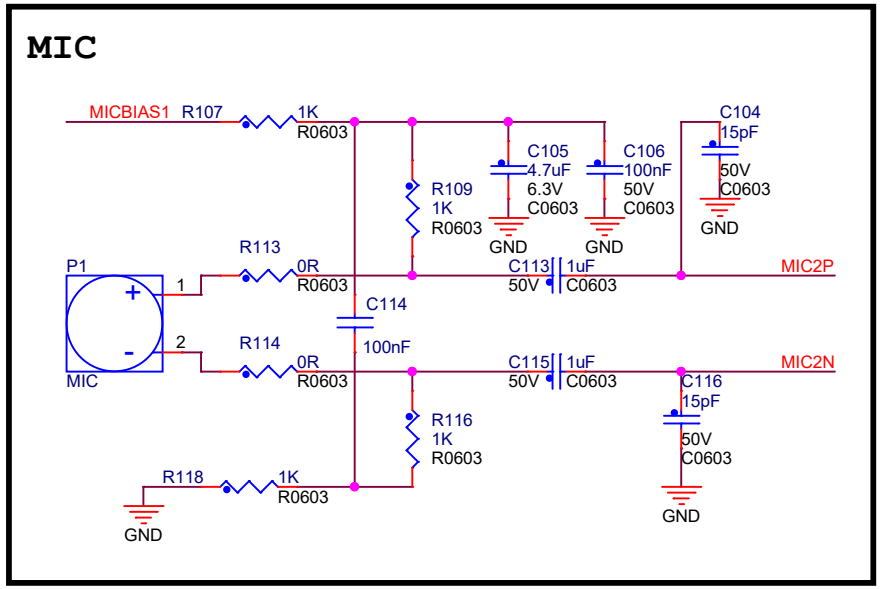

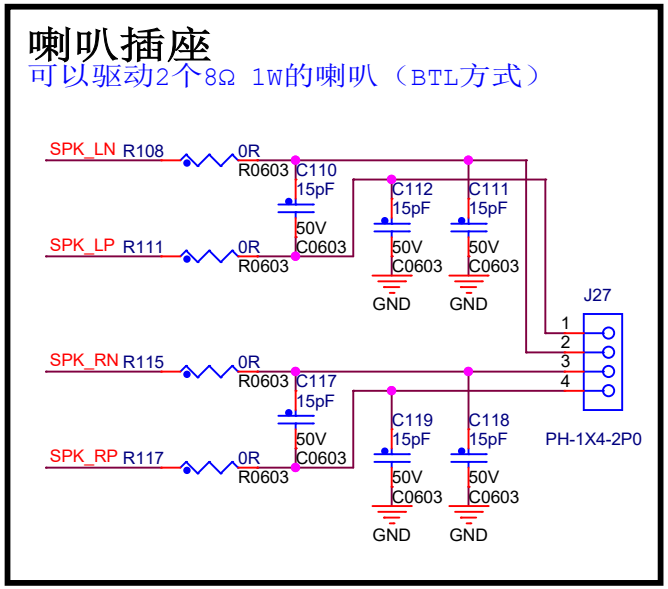

东莞野火电子技术有限公司
https://yehuosm.tmall.com

Title	野火_STM32MP157底板_原理图	
Size A4	Document Number 音频	Rev V1.0
Date: Monday, November 08, 2021	Sheet 12 of 17	

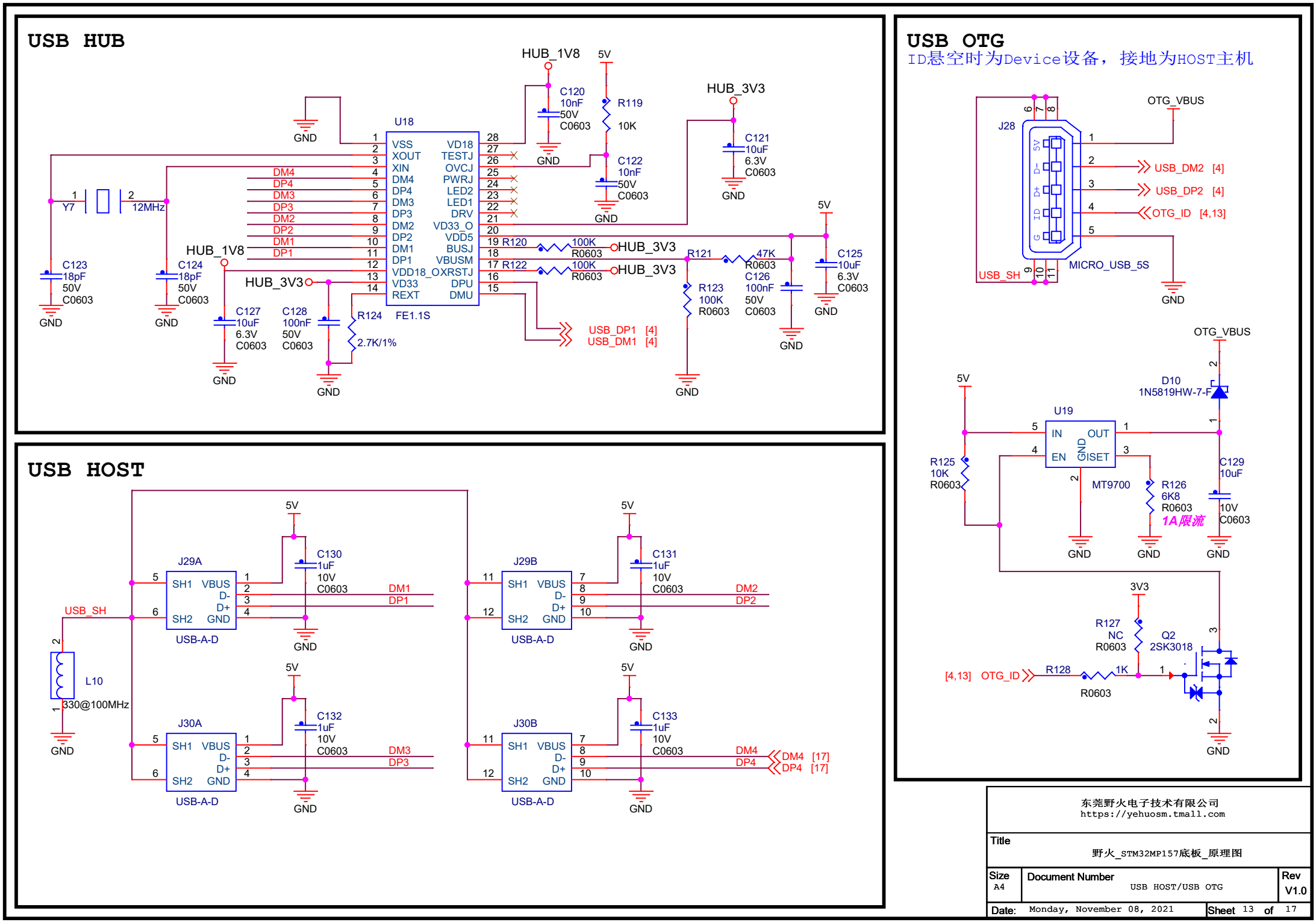
USB HUB
U18
FE1.1S
HUB_1V8
HUB_3V3
5V
GND
Y7
12MHz
C120 10nF 50V C0603
R119 10K
C122 10nF 50V C0603
C121 10uF 6.3V C0603
C123 18pF 50V C0603
C124 18pF 50V C0603
C127 10uF 6.3V C0603
C128 100nF 50V C0603
R124 2.7K/1%
R120 100K R0603
R122 100K R0603
R121 47K R0603
R123 100K R0603
C126 100nF 50V C0603
C125 10uF 6.3V C0603
USB_DP1 [4]
USB_DM1 [4]
USB OTG
ID悬空时为Device设备，接地为HOST主机
J28
MICRO_USB_5S
OTG_VBUS
USB_DM2 [4]
USB_DP2 [4]
OTG_ID [4,13]
USB_SH
D10 1N5819HW-7-F
U19
MT9700
R125 10K R0603
R126 6K8 R0603
1A限流
C129 10uF 10V C0603
3V3
R127 NC R0603
Q2 2SK3018
R128 1K R0603
[4,13] OTG_ID
USB HOST
J29A
J29B
J30A
J30B
USB-A-D
C130 1uF 10V C0603
C131 1uF 10V C0603
C132 1uF 10V C0603
C133 1uF 10V C0603
DM1 DP1
DM2 DP2
DM3 DP3
DM4 DP4
DM4 [17]
DP4 [17]
L10 330@100MHz
东莞野火电子技术有限公司
https://yehuosm.tmall.com
Title
野火_STM32MP157底板_原理图
Size A4
Document Number USB HOST/USB OTG
Rev V1.0
Date: Monday, November 08, 2021
Sheet 13 of 17

RGB转HDMI

待机功耗: 150 uW

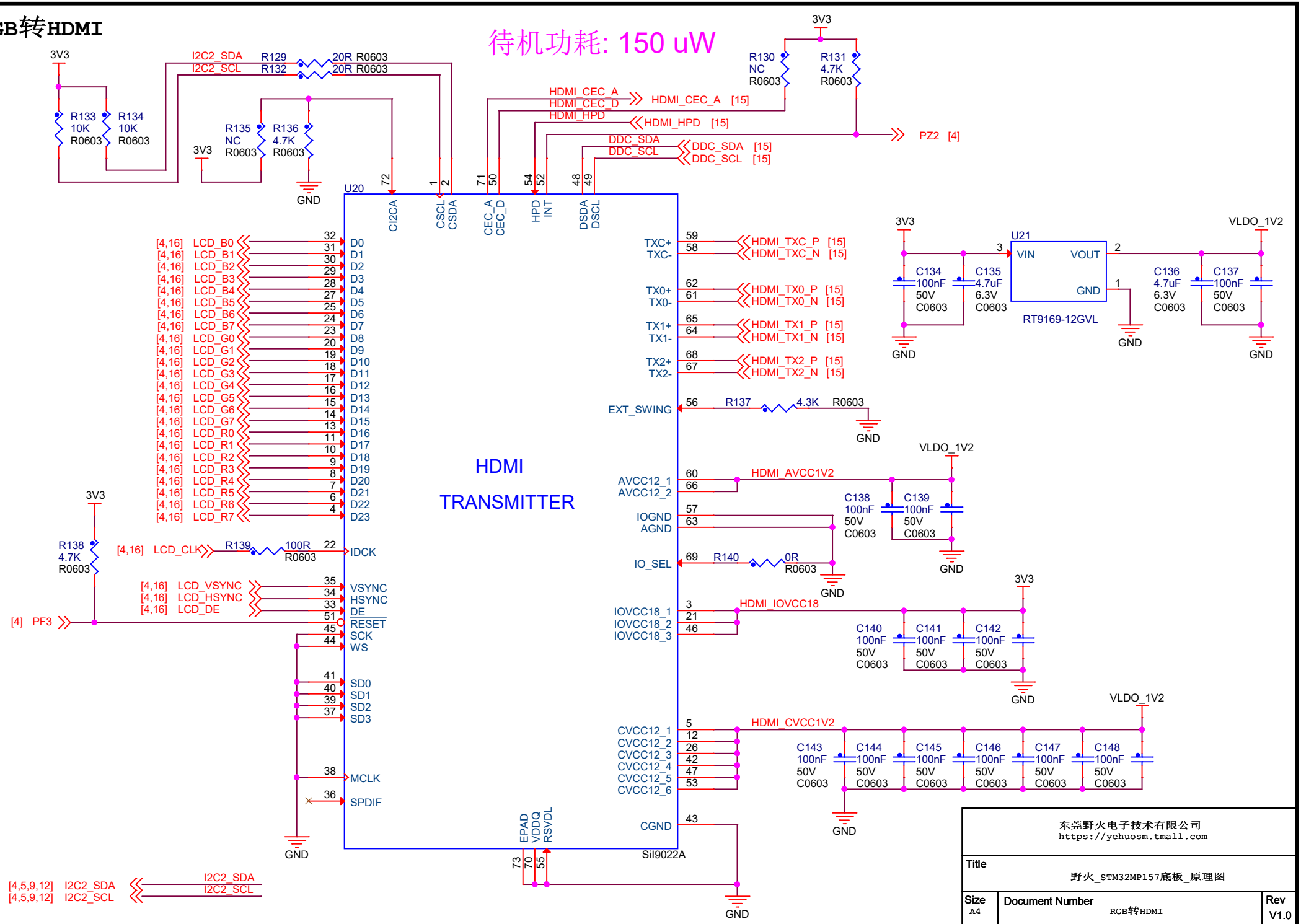

东莞野火电子技术有限公司 https://yehuosm.tmall.com	
Title	野火_STM32MP157底板_原理图
Size A4	Document Number RGB转HDMI
Rev V1.0	
Date: Monday, November 08, 2021	Sheet 14 of 17

HDMI连接器

Type A型

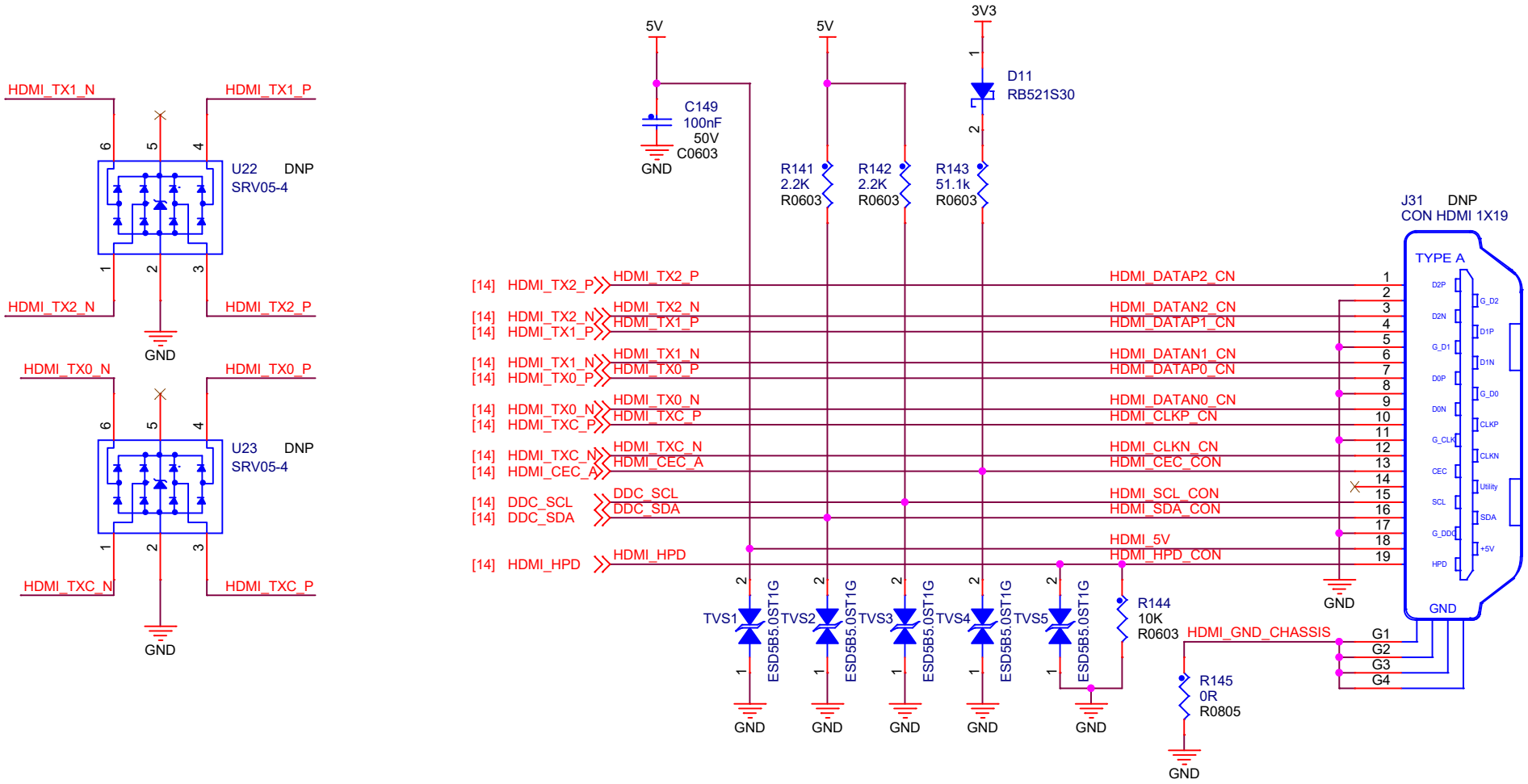

东莞野火电子技术有限公司 https://yehuosm.tmall.com		
Title 野火_STM32MP157底板_原理图		
Size A4	Document Number HDMI连接器	Rev V1.0
Date: Monday, November 08, 2021	Sheet 15 of 17	

启动设置

拨码开关拨到ON位置为1，反之为0

	UART&USB		Serial NOR Flash	eMMC	NAND Flash	SD card	Serial NAND Flash
BOOT0	0	0	1	0	1	1	1
BOOT1	0	1	0	1	1	0	1
BOOT2	0	1	0	0	0	1	1

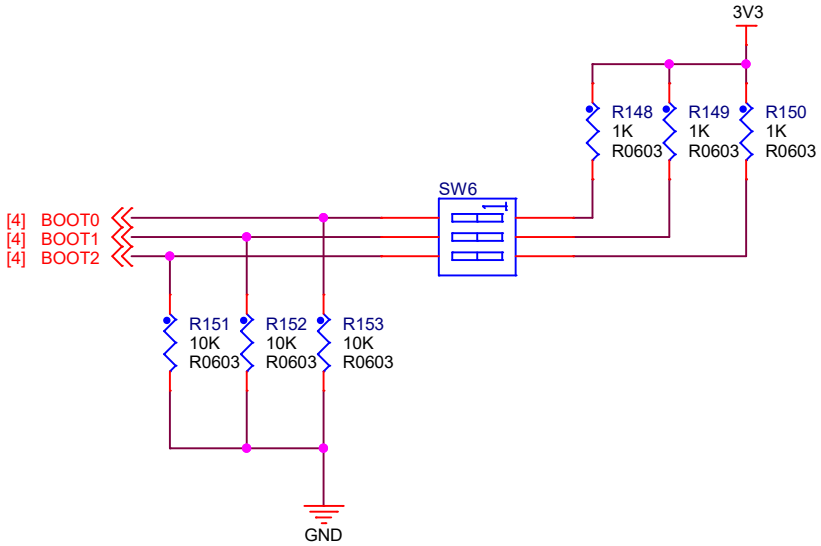

LCD-FPC接口

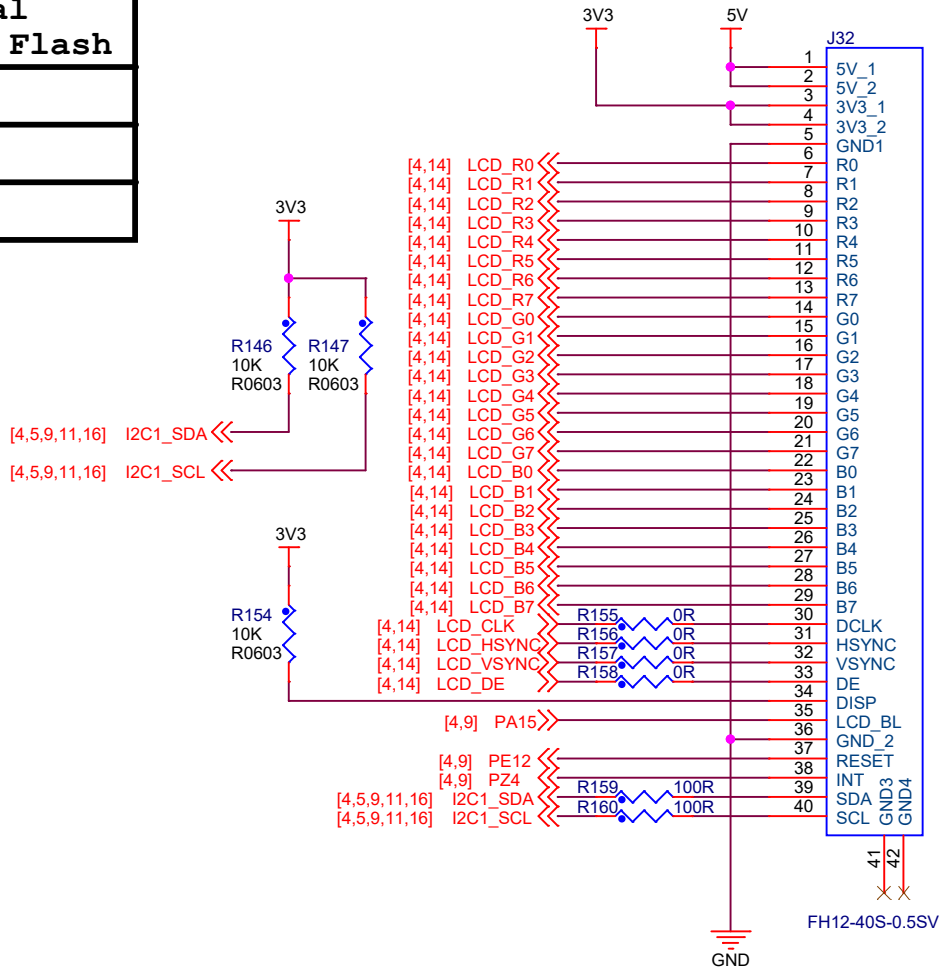

东莞野火电子技术有限公司 https://yehuosm.tmall.com		
Title 野火_STM32MP157底板_原理图		
Size A4	Document Number LCD_FPC/启动切换	Rev V1.0
Date: Monday, November 08, 2021	Sheet 16 of 17	

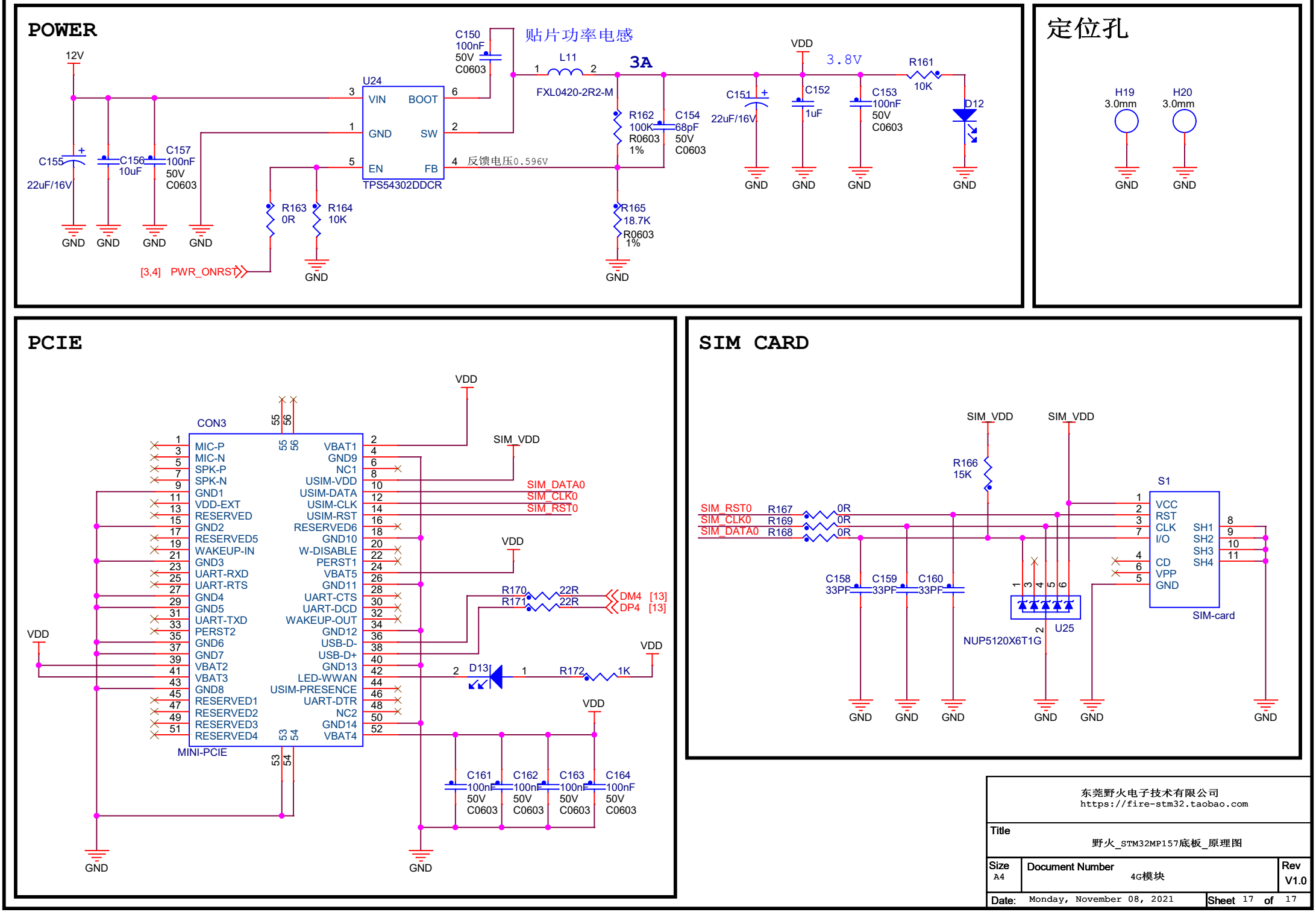
POWER
12V
C155
22uF/16V
C156
10uF
C157
100nF
50V
C0603
U24
VIN
BOOT
GND
SW
EN
FB
TPS54302DDCR
C150
100nF
50V
C0603
贴片功率电感
L11
FXL0420-2R2-M
3A
反馈电压0.596V
R162
100K
R0603
1%
C154
68pF
50V
C0603
R165
18.7K
R0603
1%
R163
0R
R164
10K
[3,4] PWR_ONRST
VDD
3.8V
C151
22uF/16V
C152
1uF
C153
100nF
50V
C0603
R161
10K
D12
GND
定位孔
H19
3.0mm
H20
3.0mm
PCIE
CON3
MINI-PCIE
MIC-P
MIC-N
SPK-P
SPK-N
GND1
VDD-EXT
RESERVED
GND2
RESERVED5
WAKEUP-IN
GND3
UART-RXD
UART-RTS
GND4
GND5
UART-TXD
PERST2
GND6
GND7
VBAT2
VBAT3
GND8
RESERVED1
RESERVED2
RESERVED3
RESERVED4
VBAT1
GND9
NC1
USIM-VDD
USIM-DATA
USIM-CLK
USIM-RST
RESERVED6
GND10
W-DISABLE
PERST1
VBAT5
GND11
UART-CTS
UART-DCD
WAKEUP-OUT
GND12
USB-D-
USB-D+
GND13
LED-WWAN
USIM-PRESENCE
UART-DTR
NC2
GND14
VBAT4
SIM_VDD
SIM_DATA0
SIM_CLK0
SIM_RST0
R170
22R
R171
22R
DM4 [13]
DP4 [13]
D13
R172
1K
C161
100nF
50V
C0603
C162
100nF
50V
C0603
C163
100nF
50V
C0603
C164
100nF
50V
C0603
SIM CARD
SIM_VDD
R166
15K
S1
VCC
RST
CLK
I/O
CD
VPP
GND
SH1
SH2
SH3
SH4
SIM-card
SIM_RST0
SIM_CLK0
SIM_DATA0
R167
R169
R168
0R
C158
33PF
C159
33PF
C160
33PF
U25
NUP5120X6T1G
东莞野火电子技术有限公司
https://fire-stm32.taobao.com
Title
野火_STM32MP157底板_原理图
Size
A4
Document Number
4G模块
Rev
V1.0
Date: Monday, November 08, 2021
Sheet 17 of 17